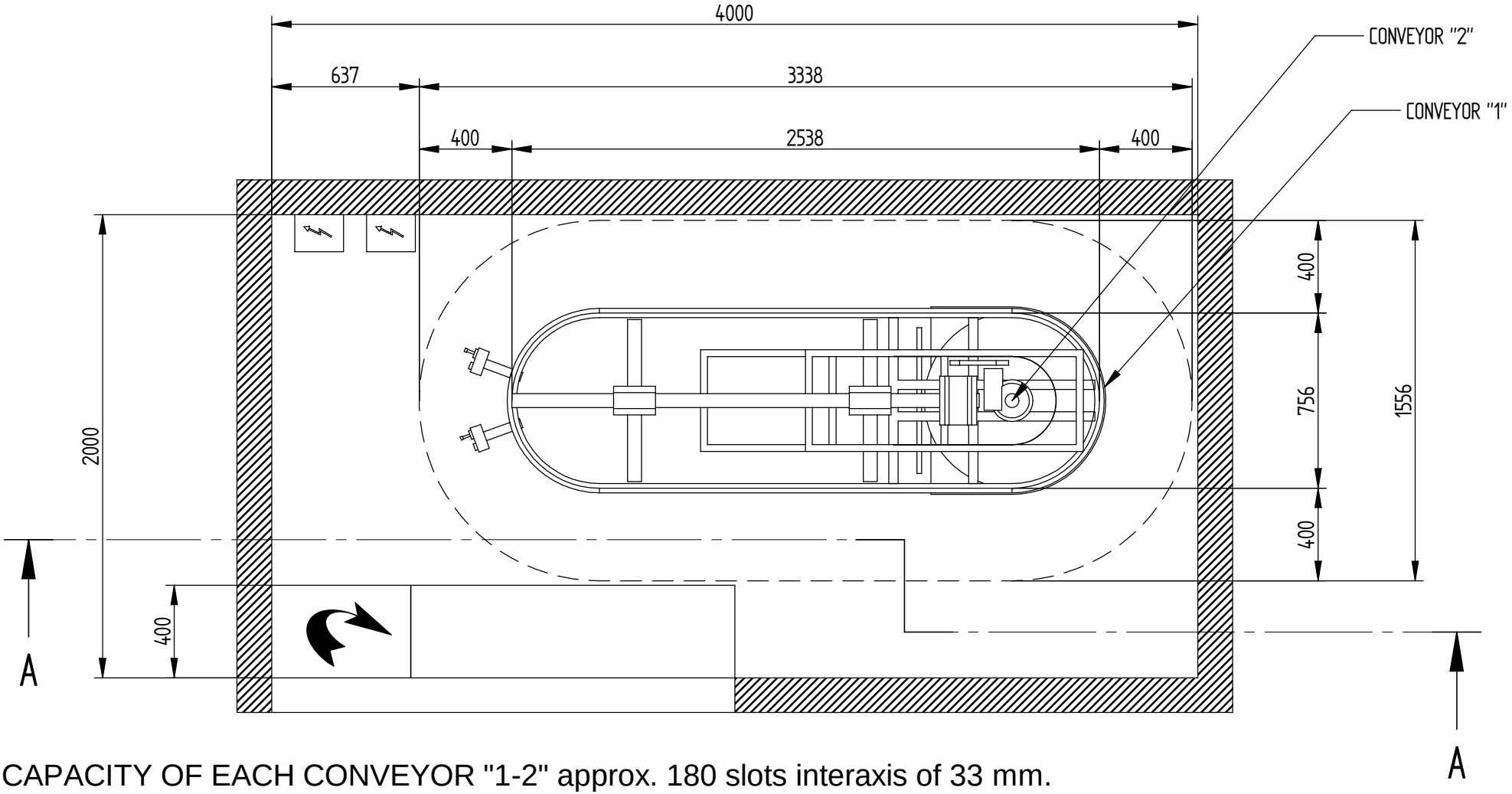

CAPACITY OF EACH CONVEYOR "1-2" approx. 180 slots interaxis of 33 mm. When storing particularly bulky garments such as those which are usually present in a cloakroom, it is not always possible to place one garment in every slot, but it may be necessary to skip one every so often in order to recuperate space width ways. According to our experience, we consider that by using hanger of reduced width, such as those supplyed by us, it is possible to position up to one garment every 50 mm. Assuming such a value, we are able to store up to 115-125 bulky garments.
TOTAL CAPACITY CONVEYORS "1+2" approx. 360 slots interaxis of 33 mm., 230-250/p (50 mm.)

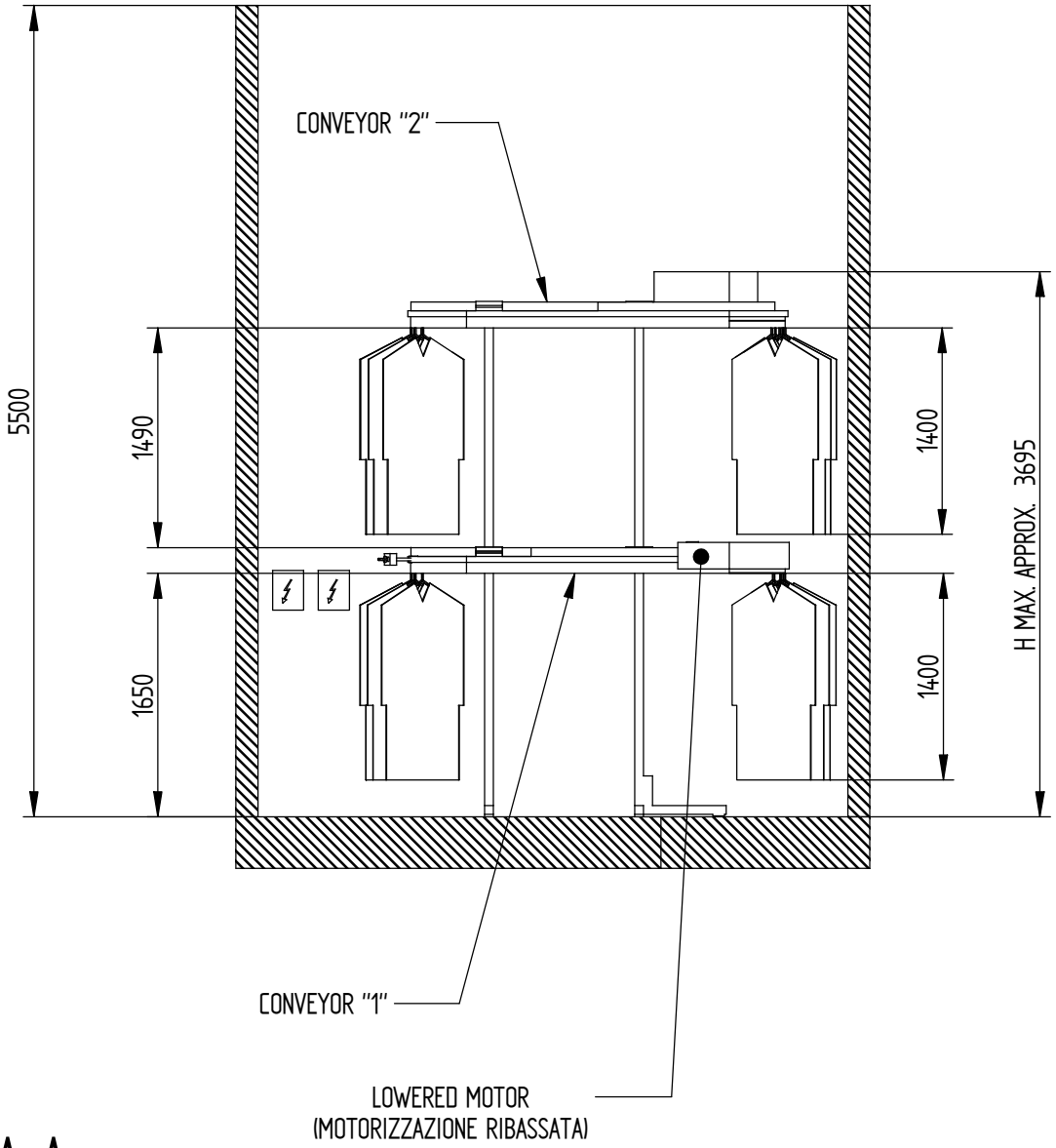
CONVEYOR "2"
5500
1490
1650
1400
1400
H MAX. APPROX. 3695
CONVEYOR "1"
LOWERED MOTOR
(MOTORIZZAZIONE RIBASSATA)

SECTION A-A

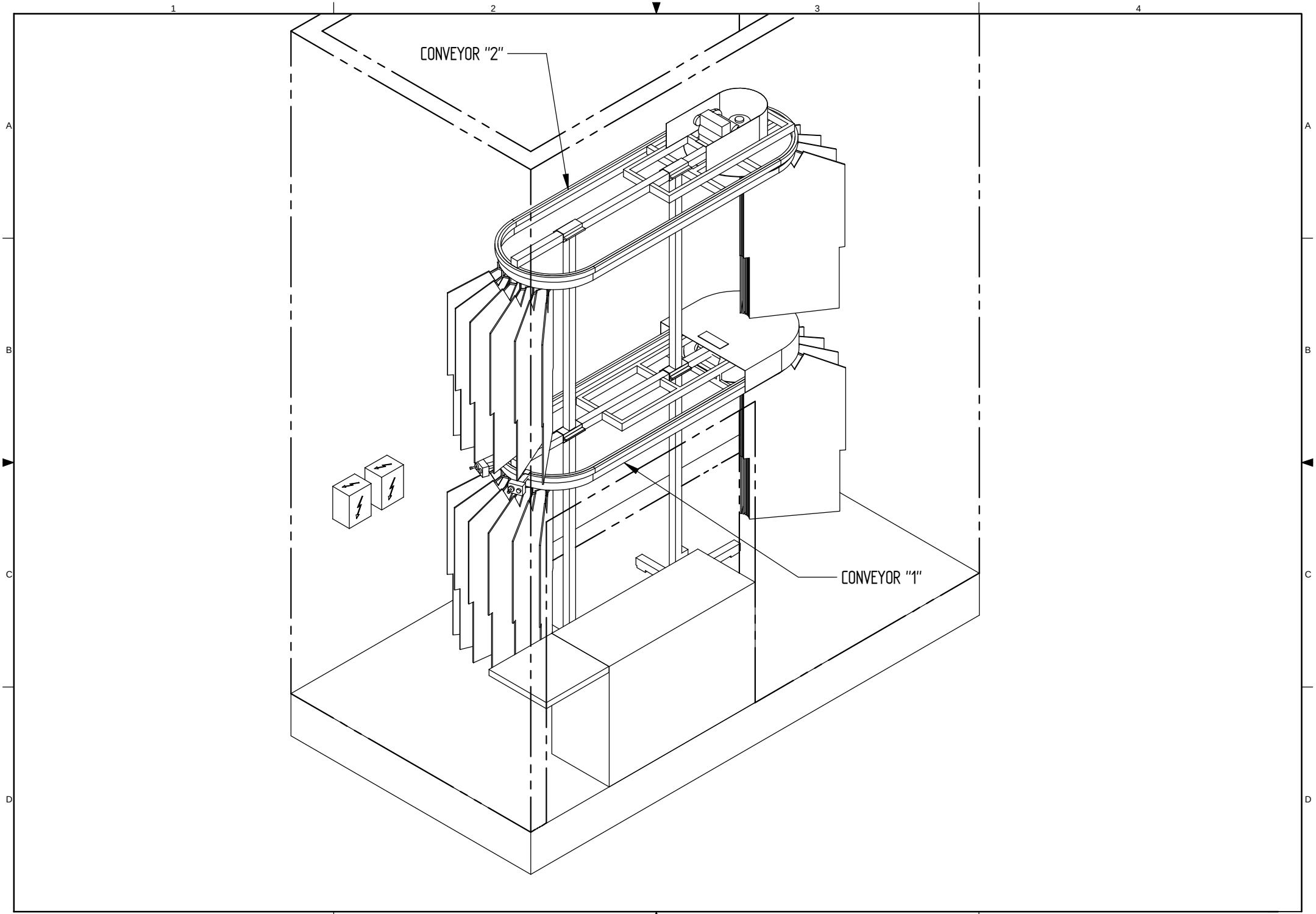
CONVEYOR "2"
CONVEYOR "1"